SST Terminal Box

IP-SST402012EX

316 STAINLESS STEEL | SCREWED LID
IP66 | IECEx | ATEX

400H x 200W x 120D
USEABLE DEPTH: 97mm

The IP Enclosures IECEx and ATEX stainless steel terminal boxes are designed for electrical, electronic and pneumatic equipment used in hazardous and potentially explosive environments. Manufactured in Italy from high-quality stainless steel, the range provides a robust enclosure solution for demanding applications including oil and gas, mining, chemical and petrochemical processing, food processing and other industrial hazardous areas.

The IECEx range is certified as an Ex Component with protection methods Ex eb IIC Gb for gas atmospheres and Ex tb IIIC Db for combustible dust atmospheres. This makes the enclosures suitable for integration into equipment intended for hazardous areas, including applications associated with Zones 1 and 2 for gas and Zones 21 and 22 for dust, subject to the certification and design requirements of the completed equipment.

Protection: IP66 Tested in accordance with IEC 60079-0.

Hazardous Area Protection:
IECEX:
IECEx Certificate: IECEx TPS 23.0008U, Issue 1
Gas protection: Ex eb IIC Gb
Dust protection: Ex tb IIIC Db
IECEx certification type: Ex Component Certificate

ATEX:
II 2G Ex eb IIC Gb
II 2D Ex tb IIIC Db
ATEX Certificate: TÜV IT 16 ATEX 002 U
ATEX Category: 2G / 2D

Standards:
IEC 60079-0:2017 – Explosive atmospheres – General requirements
IEC 60079-7:2017 – Equipment protection by increased safety “e”
IEC 60079-31:2022 – Equipment dust ignition protection by enclosure “t”

Material:
- Body: 1.0mm Grade 316 stainless steel
- Cover: 1.0mm Grade 316 stainless steel
- Seal: Silicone
- Cover screw sealing washers: Silicone supplied as standard, with black hydrocarbon-resistant NBR also provided.

Construction: The enclosure incorporates a welded stainless steel body with a removable screw-fastened lid. A silicone seal between the enclosure body and lid provides a reliable seal and can be removed for cleaning.

Internal Device Mounting Plate: The terminal box is supplied with a 2.5 mm galvanised steel internal device mounting plate.

Surface Finish: Fine satin brushed stainless steel finish.

Mass: 4.6Kg.

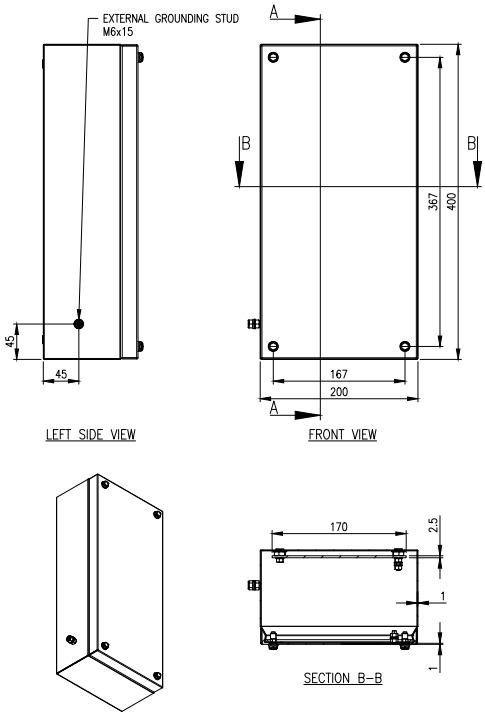

IECEx Temperature Rating:
Ambient temperature: −40°C to +80°C
Service temperature: −40°C to +115°C

IMPORTANT NOTE:
The IECEx certification is an Ex Component Certificate, identified by the suffix “U”. The terminal box is not intended to be used alone as complete Ex equipment. The completed electrical equipment or system must be designed, assembled and certified as required for the intended hazardous-area application.

© IP Enclosures 2026

SST Terminal Box

IP-SST402012EX

316 STAINLESS STEEL | SCREWED LID
IP66 | IECEx | ATEX

400H x 200W x 120D
USEABLE DEPTH: 97mm

ACCESSORIES:

Part Number	Description
IP-46000073	316L Stainless Steel Flat Brackets for Stainless Steel Terminal Boxes / Pushbutton Enclosures (Set of 4)
IP-46000074	316L Stainless Steel Raised Brackets for Stainless Steel Terminal Boxes / Pushbutton Enclosures (Set of 4)

CERTIFICATES:
IECEx Certification: Certificate No. IECEx TPS 23.0008U, Issue 1

HAZARDOUS AREA PROTECTION:
IECEX:
IECEx Certificate: IECEx TPS 23.0008U, Issue 1
Gas protection: Ex eb IIC Gb
Dust protection: Ex tb IIIC Db
IECEx certification type: Ex Component Certificate

ATEX:
II 2G Ex eb IIC Gb
II 2D Ex tb IIIC Db
ATEX Certificate: TÜV IT 16 ATEX 002 U
ATEX Category: 2G / 2D

STANDARDS:

IECEx Ex eb IIC Gb	Certified enclosure protection against hazardous gas environments.
IECEx Ex tb IIIC Db	Certified enclosure protection against hazardous dust environments.
IEC 60079-0:2017	Explosive atmospheres - General requirements. Certificate No. IECEx TPS 23.0008U, Issue 1
IEC 60079-7:2017	Equipment protection by increased safety “e”. Certificate No. IECEx TPS 23.0008U, Issue 1
IEC 60079-31:2022	Equipment dust ignition protection by enclosure “t”. Certificate No. IECEx TPS 23.0008U, Issue 1

© IP Enclosures 2026