RevNo	Revision note	Date	Signature	Checked
1	GENERAL REVISION	04/04/25	IP	IP

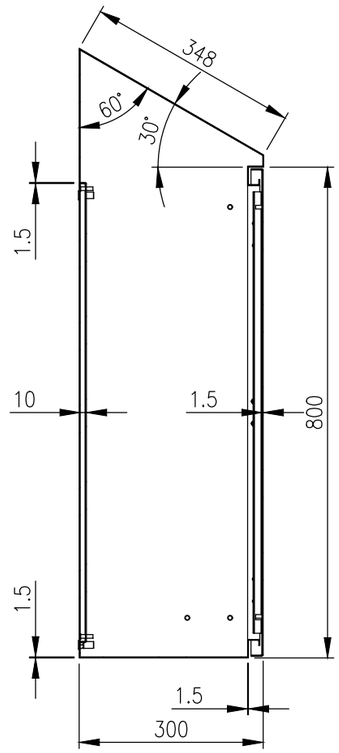

SECTION AV–AV

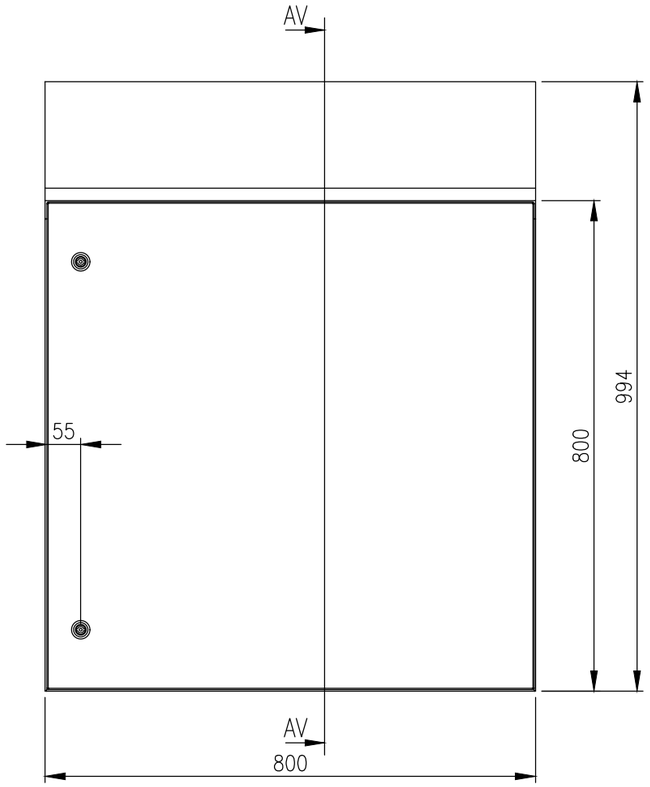

FRONT VIEW

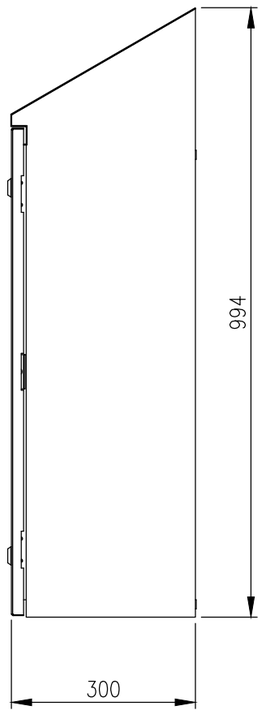

RIGHT SIDE VIEW

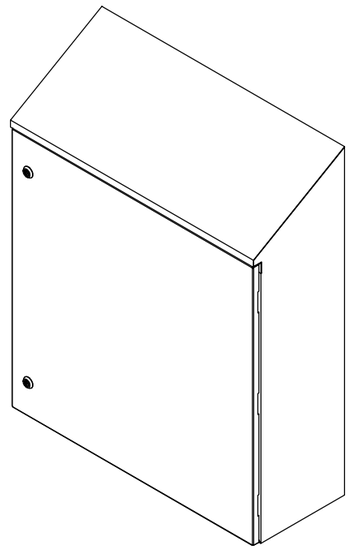

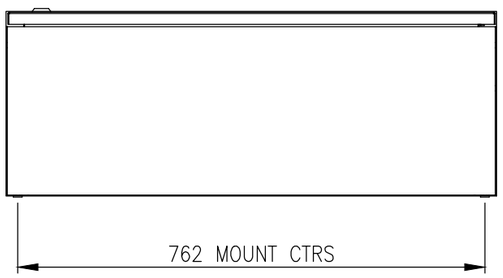

BOTTOM VIEW

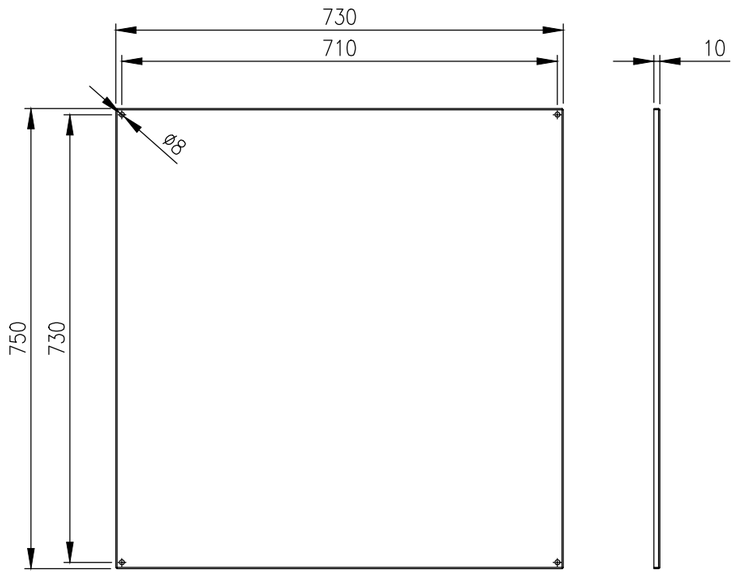

DEVICE MOUNTING PLATE

MATERIAL
BODY: 1.5mm GALVANISED STEEL SHEET
DOOR: 1.5mm GALVANISED STEEL SHEET
DEVICE PLATE: 1.5mm GALVANISED STEEL SHEET
SEAL: POLYURETHANE
SURFACE TREATMENT: POWDER–COAT 80–120micron
COLOUR: RAL7035 LIGHT GREY

MASS: 39.7Kg.

PROTECTION: IP66 IK10 (NEMA 4)
STANDARD: IEC/EN62208, IEC/EN/AS60529

© IP ENCLOSURES 2023.
THIS DRAWING SHALL NOT BE COPIED OR REPRODUCED
WITHOUT AUTHORISATION FROM IP ENCLOSURES.
www.ipenclosures.com.au

IMPORTANT NOTE:

WALL MOUNTING BRACKETS ARE NOT INCLUDED AND MUST BE ORDERED SEPARATELY.

Itemref	Quantity	Title/Name, designation, material, dimension etc	Article No./Reference

Designed by	Checked by	Approved by - date	Filename	Date	Scale
IP	IP	27/01/23	IP–SSR808030	27/01/23	1:10

Enclosures

800x800x300 STEEL SLOPING ROOF ENCLOSURE

IP–SSR808030 | Edition 1 | Sheet 1/1