SS1 Electrical Enclosure

IP-SS302015EX

316L STAINLESS STEEL | SINGLE DOOR
IP66 IK10 | IECEx | ATEX

300H x 200W x 150D

IP Enclosures IECEx and ATEX stainless steel electrical enclosures are designed for housing electrical, electronic, control and instrumentation equipment in hazardous and potentially explosive environments. Manufactured in Italy from high-quality 316L stainless steel, the range provides a robust and corrosion-resistant enclosure solution for demanding applications including oil and gas, chemical and petrochemical processing, food and beverage, pharmaceutical processing and other hazardous industrial environments.

The range is certified as an Ex Component with protection methods Ex eb IIC Gb for gas atmospheres and Ex tb IIIC Db for combustible dust atmospheres. This provides a certified enclosure platform for equipment intended for hazardous-area applications associated with Zones 1 and 2 for gas and Zones 21 and 22 for dust, subject to the certification and design requirements of the completed electrical equipment.

Protection: IP66 IK10

Hazardous Area Protection:
IECEX:
IECEx Certificate: IECEx TPS 23.0008U, Issue 1
Gas protection: Ex eb IIC Gb
Dust protection: Ex tb IIIC Db
IECEx certification type: Ex Component Certificate

ATEX:
II 2G Ex eb IIC Gb
II 2D Ex tb IIIC Db
ATEX Certificate: TÜV IT 16 ATEX 002 U
ATEX Category: 2G / 2D

Standards:
IEC 60079-0:2017 – Explosive atmospheres – General requirements
IEC 60079-7:2017 – Equipment protection by increased safety “e”
IEC 60079-31:2022 – Equipment dust ignition protection by enclosure “t”

Material:
- Enclosure Body: 1.2mm Grade 316L stainless steel
- Door: 1.2mm Grade 316L stainless steel, solid hinged construction
- Lock: Grade 316L stainless steel with 5mm standard insert
- Device Mounting Plate: 2.5mm FeZn galvanised steel
- Seal: Silicone

Construction: The enclosure incorporates a robust stainless steel body with a solid hinged door, providing substantially greater usable internal space than a terminal box. The hinged construction provides convenient access to installed electrical and control equipment for installation, inspection and maintenance.

Internal Device Mounting Plate: The enclosure is supplied with a 2.5mm galvanised steel internal device mounting plate.

Mass: 5.0Kg.

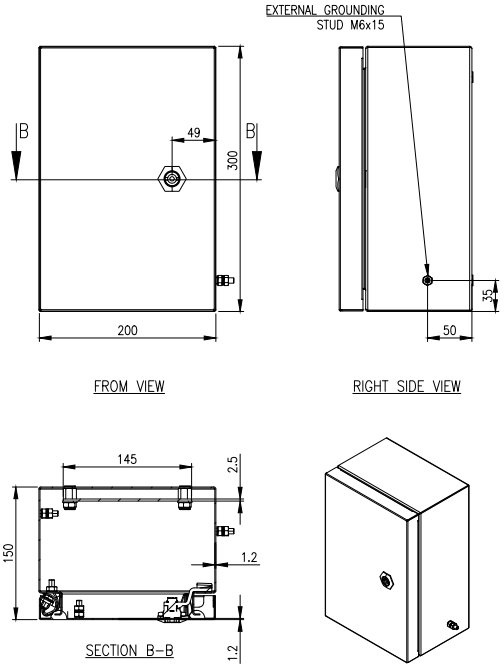

IECEx Temperature Rating:
Ambient temperature: −40°C to +80°C
Service temperature: −40°C to +115°C

IMPORTANT NOTE:
The IECEx certification is an Ex Component Certificate, identified by the suffix “U”. The terminal box is not intended to be used alone as complete Ex equipment. The completed electrical equipment or system must be designed, assembled and certified as required for the intended hazardous-area application.

© IP Enclosures 2026

SS1 Electrical Enclosure IP-SS302015EX

316L STAINLESS STEEL | SINGLE DOOR IP66 IK10 | IECEx | ATEX

300H x 200W x 150D

ACCESSORIES:

Part Number	Description
IP-46000073	316L Stainless Steel Flat Brackets for Stainless Steel Terminal Boxes / Pushbutton Enclosures (Set of 4)
IP-46000074	316L Stainless Steel Raised Brackets for Stainless Steel Terminal Boxes / Pushbutton Enclosures (Set of 4)

CERTIFICATES:
IECEx Certification: Certificate No. IECEx TPS 23.0008U, Issue 1
ATEX Certification: Certificate TÜV IT 16 ATEX 002 U

HAZARDOUS AREA PROTECTION:
IECEX:
IECEx Certificate: IECEx TPS 23.0008U, Issue 1
Gas protection: Ex eb IIC Gb
Dust protection: Ex tb IIIC Db
IECEx certification type: Ex Component Certificate

ATEX:
II 2G Ex eb IIC Gb
II 2D Ex tb IIIC Db
ATEX Certificate: TÜV IT 16 ATEX 002 U
ATEX Category: 2G / 2D

STANDARDS:

IECEx Ex eb IIC Gb	Certified enclosure protection against hazardous gas environments.
IECEx Ex tb IIIC Db	Certified enclosure protection against hazardous dust environments.
IEC 60079-0:2017	Explosive atmospheres - General requirements. Certificate No. IECEx TPS 23.0008U, Issue 1
IEC 60079-7:2017	Equipment protection by increased safety “e”. Certificate No. IECEx TPS 23.0008U, Issue 1
IEC 60079-31:2022	Equipment dust ignition protection by enclosure “t”. Certificate No. IECEx TPS 23.0008U, Issue 1

© IP Enclosures 2026