RevNo	Revision note	Date	Signature	Checked
	GENERAL REVISION		IP	IP

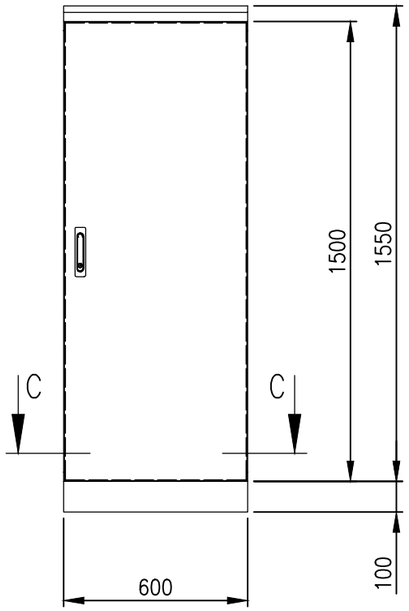

FRONT VIEW

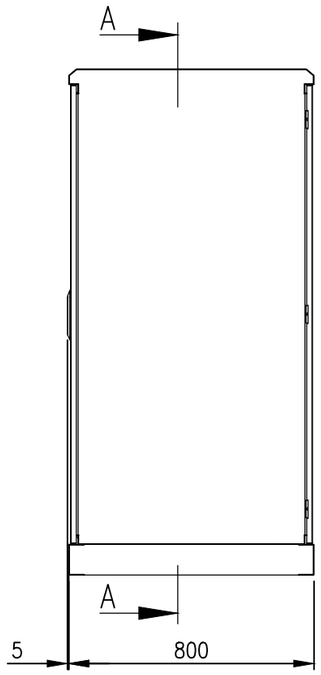

SIDE VIEW

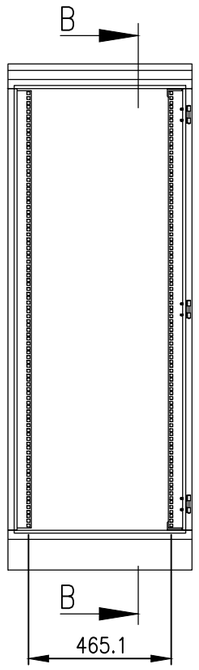

SECTION A–A

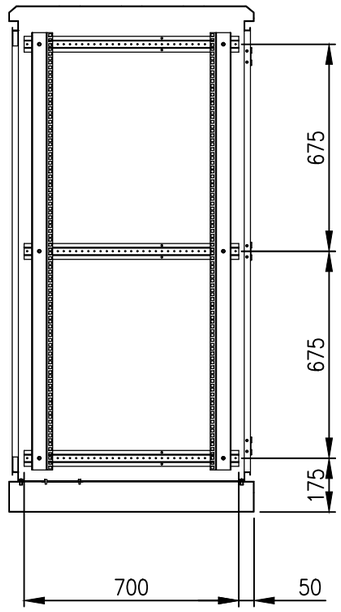

SECTION B–B

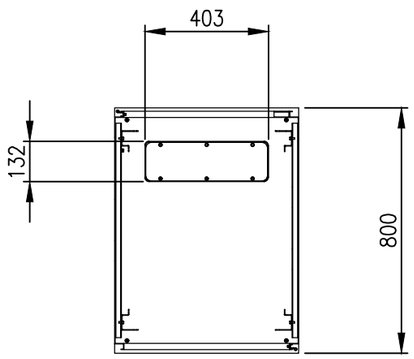

SECTION C–C

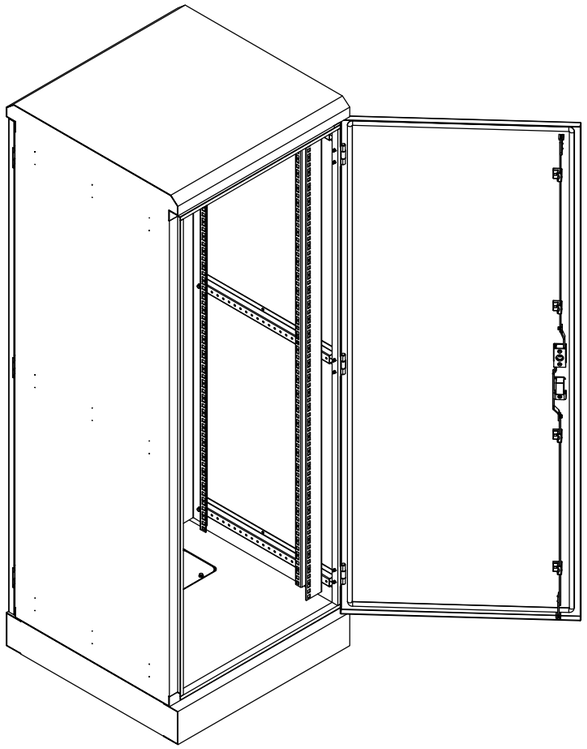

MATERIAL
BODY: 1.5mm GALVANISED STEEL SHEET
DOOR: 1.5mm GALVANISED STEEL SHEET
SEAL: POLYURETHANE
SURFACE TREATMENT: POWDER–COAT 80–120micron

PROTECTION: IP66 IK10, NEMA4
STANDARD: IEC/EN/AS60529

© IP ENCLOSURES 2022.
THIS DRAWING SHALL NOT BE COPIED OR REPRODUCED WITHOUT AUTHORISATION FROM IP ENCLOSURES.
www.ipenclosures.com.au

Itemref	Quantity	Title/Name, designation, material, dimension etc			Article No./Reference
Designed by IP		Checked by IP	Approved by - date 08/08/22	Filename IP–SD1606080	Date 04/08/22	Scale 1:20

Enclosures

32RU 1600x600x800 IP66 19" DATA RACK

IP–SD1606080 | Edition 0 | Sheet 1/1