RevNo	Revision note	Date	Signature	Checked
2	GENERAL REVISION	24/03/23	IP	IP

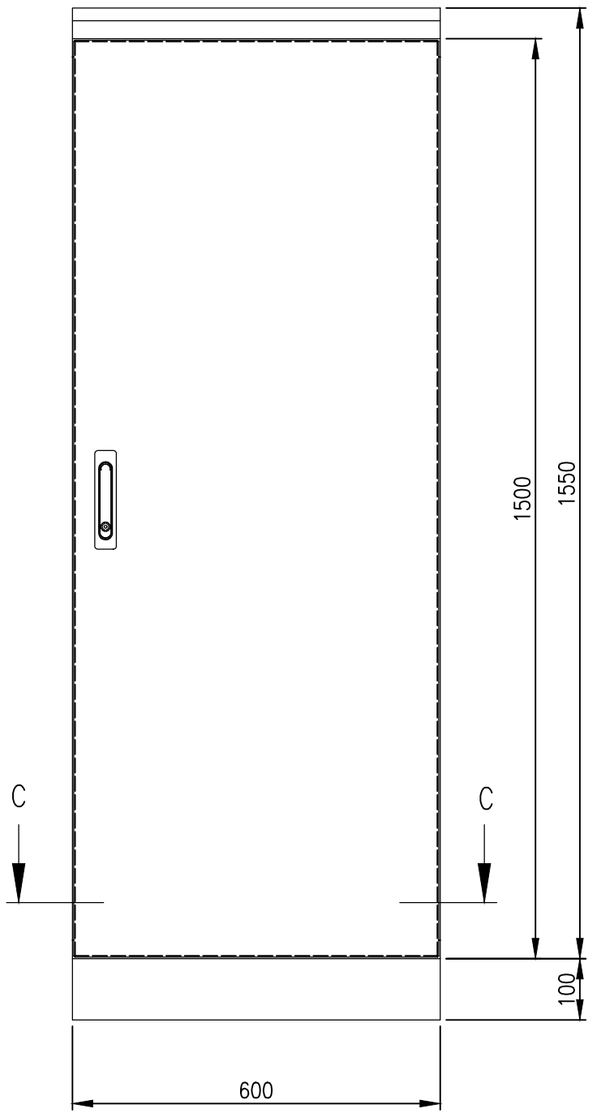

FRONT VIEW

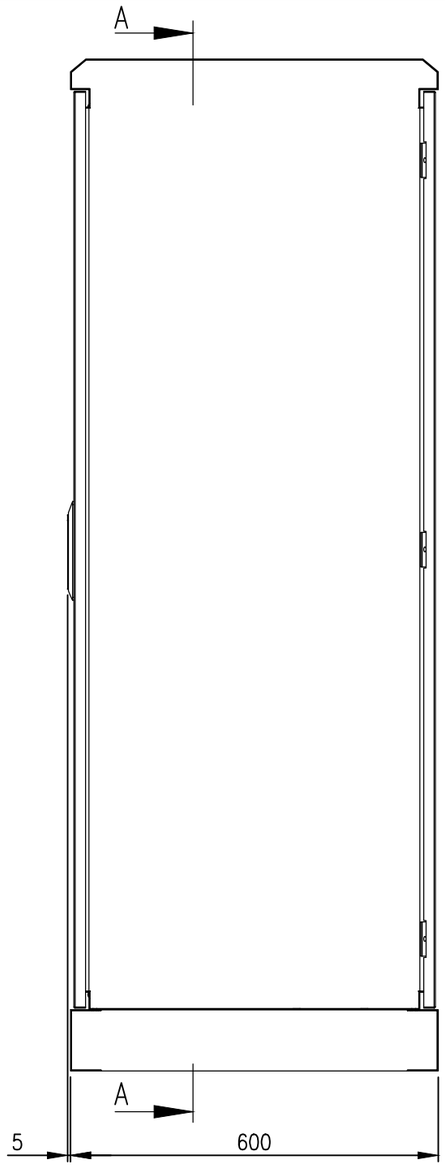

SIDE VIEW

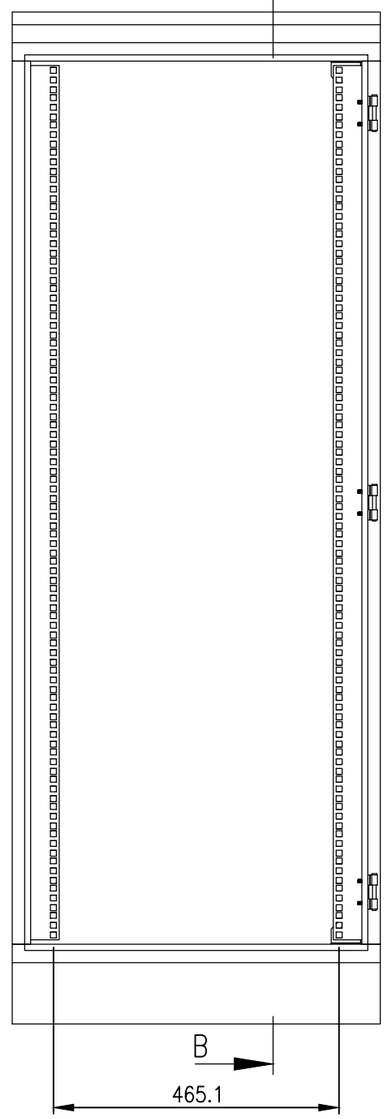

SECTION AA

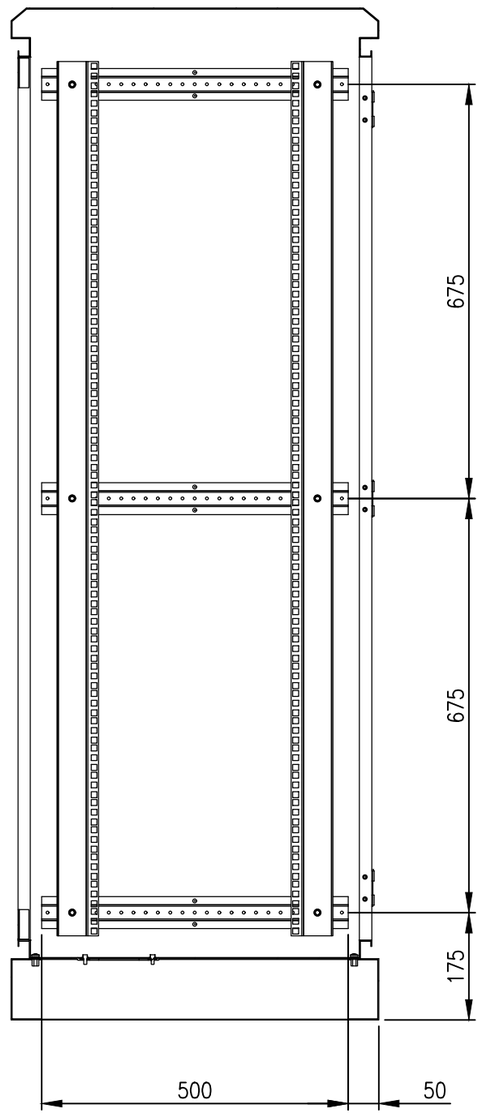

SECTION BB

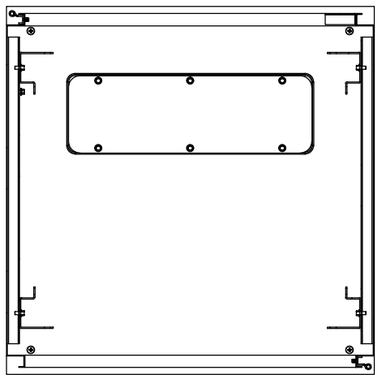

SECTION CC

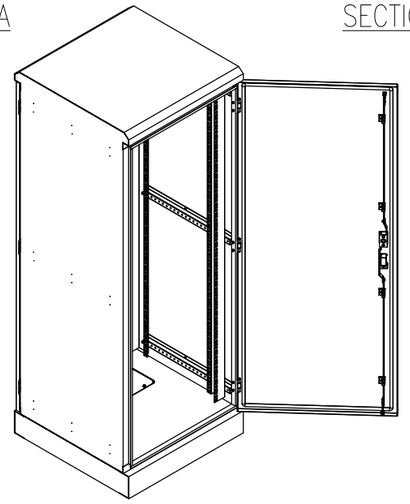

MATERIAL
BODY: 1.5mm GALVANISED STEEL SHEET
DOOR: 1.5mm GALVANISED STEEL SHEET
SEAL: POLYURETHANE
SURFACE TREATMENT: POWDER-COAT 80-120micron

PROTECTION: IP66 IK10, NEMA4
STANDARD: IEC/EN/AS60529

© IP ENCLOSURES 2018.
THIS DRAWING SHALL NOT BE COPIED OR REPRODUCED
WITHOUT AUTHORISATION FROM IP ENCLOSURES.
www.ipenclosures.com.au

Itemref	Quantity	Title/Name, designation, material, dimension etc		Article No./Reference	
Designed by IP		Checked by IP	Approved by - date 02/07/18	Filename IP-SD1606060	Date 02/07/18	Scale 1:10

IP Enclosures

32RU 1600x600x600 IP66 19" DATA RACK

IP-SD1606060 | Edition 2 | Sheet 1/1