RevNo	Revision note	Date	Signature	Checked
0	GENERAL REVISION		IP	IP

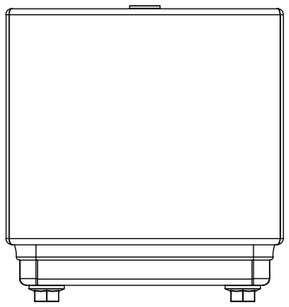

TOP VIEW

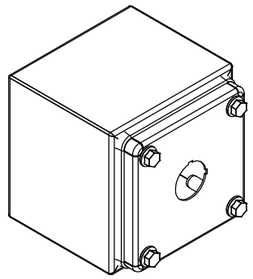

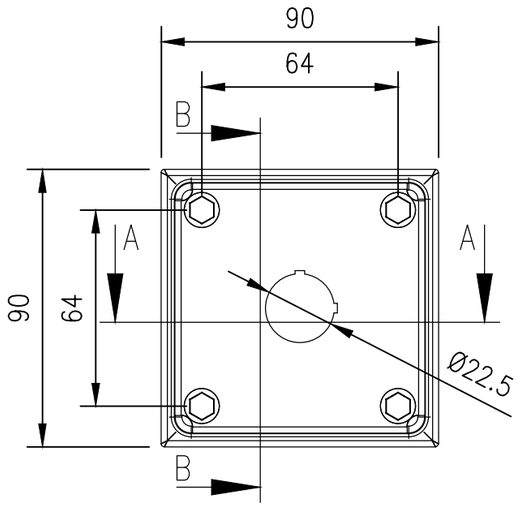

FRONT VIEW

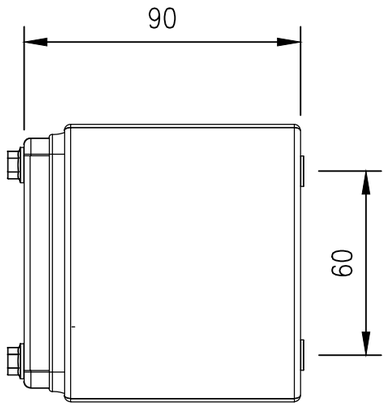

RIGHT SIDE VIEW

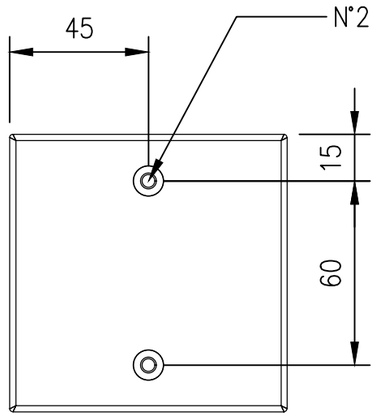

REAR VIEW

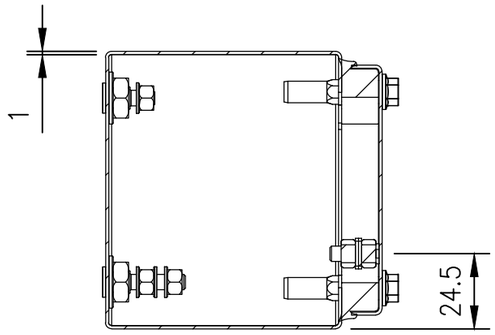

SECTION B–B

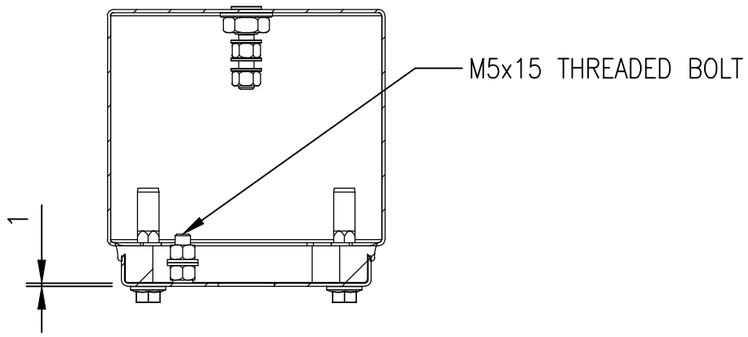

SECTION A–A

MATERIAL
BODY: 1.0mm 304 STAINLESS STEEL
COVER: 1.0mm 304 STAINLESS STEEL
SEAL: BLUE SILICONE

PROTECTION: IP66 IK08, IP69K,
NEMA TYPE 1, 12, 4, 4x

© IP ENCLOSURES 2023.
THIS DRAWING SHALL NOT BE COPIED OR REPRODUCED
WITHOUT AUTHORISATION FROM IP ENCLOSURES.
www.ipenclosures.com.au

Itemref	Quantity	Title/Name, designation, material, dimension etc		Article No./Reference	
Designed by IP	Checked by IP	Approved by - date 17/03/23	Filename IP–HPB1	Date 17/03/23	Scale 1:2
Enclosures		90x90x90 304SS PUSHBUTTON ENCLOSURE			
		IP–HPB1		Edition 0	Sheet 1/1