RevNo	Revision note	Date	Signature	Checked
1	GENERAL REVISION	26/03/25	IP	IP

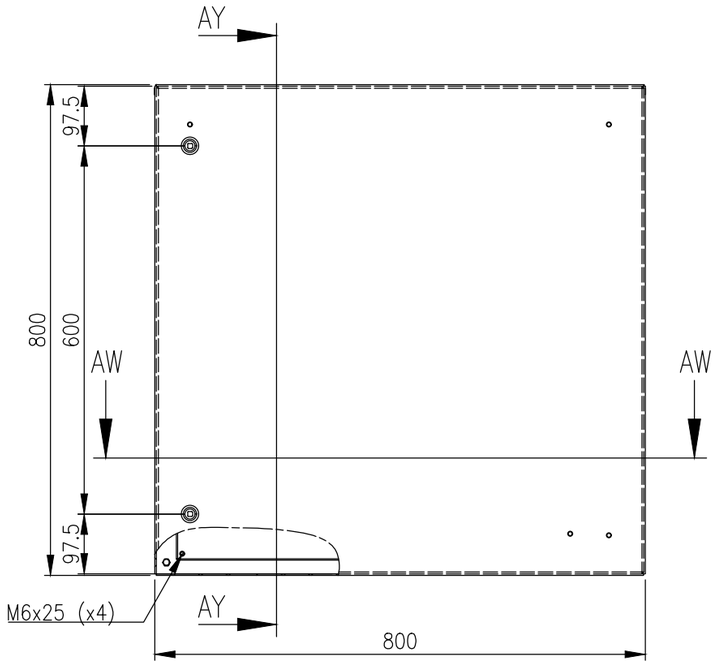

FRONT VIEW

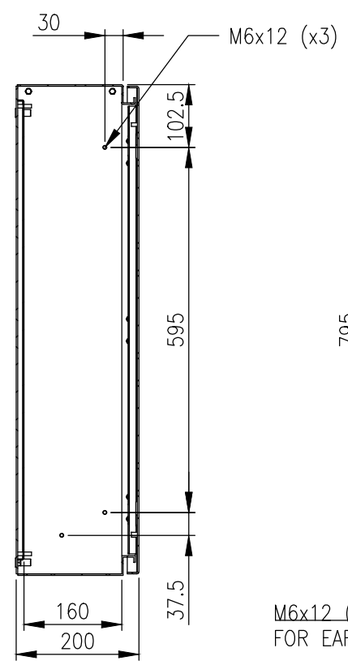

SECTION AY–AY

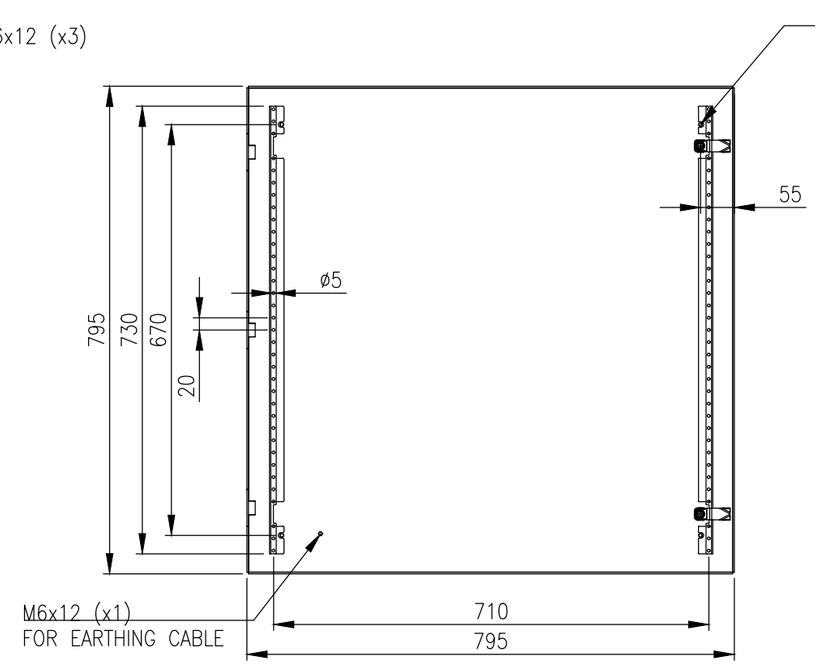

INSIDE DOOR VIEW

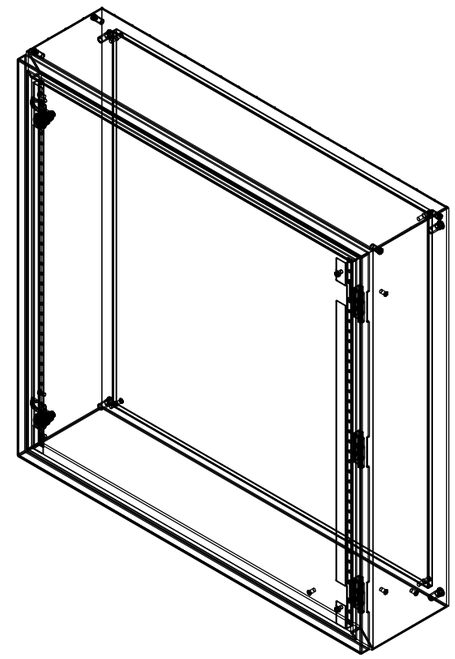

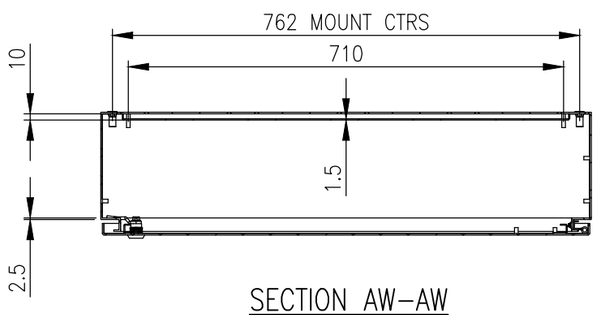

SECTION AW–AW

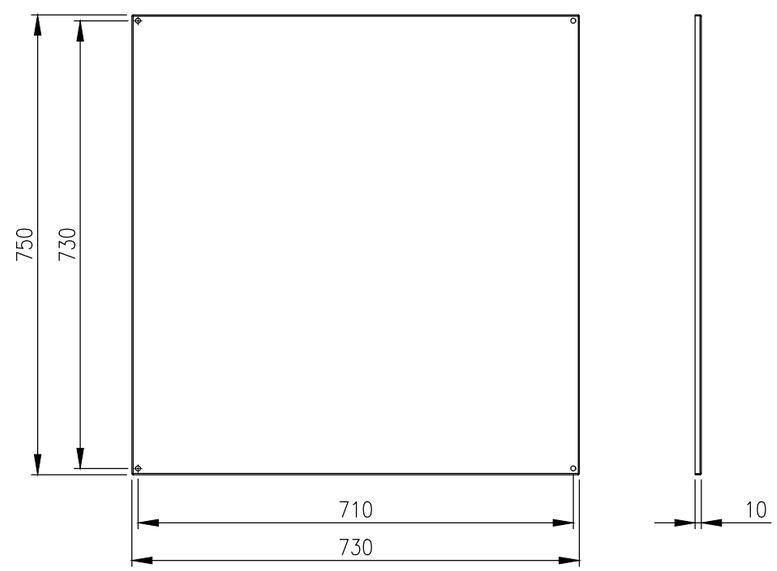

DEVICE MOUNTING PLATE

MATERIAL
BODY: 2.5mm MARINE GRADE ALUMINUM
DOOR: 2.5mm MARINE GRADE ALUMINUM
DEVICE PLATE: 1.5mm GALVANISED STEEL SHEET
SEAL: POLYURETHANE
SURFACE TREATMENT: POWDER–COAT 80–120micron
COLOUR RAL7035 LIGHT GREY

MASS: 29.0Kg.

PROTECTION: IP66 IK10
STANDARD: IEC/EN62208, IEC/EN/AS60529

© IP ENCLOSURES 2024.
THIS DRAWING SHALL NOT BE COPIED OR REPRODUCED
WITHOUT AUTHORISATION FROM IP ENCLOSURES.
www.ipenclosures.com.au

IMPORTANT NOTE:
WALL MOUNTING BRACKETS ARE NOT INCLUDED AND MUST BE ORDERED SEPARATELY.

Itemref	Quantity	Title/Name, designation, material, dimension etc		Article No./Reference	
Designed by IP	Checked by IP	Approved by - date 03/09/24	Filename IP–A808020	Date 03/09/24	Scale 1:10

IP Enclosures

800x800x200 ALUMINIUM ENCLOSURE

IP–A808020 | Edition 1 | Sheet 1/1