RevNo	Revision note	Date	Signature	Checked
2	GENERAL REVISION		IP	IP

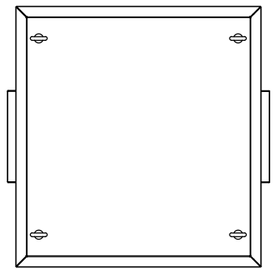

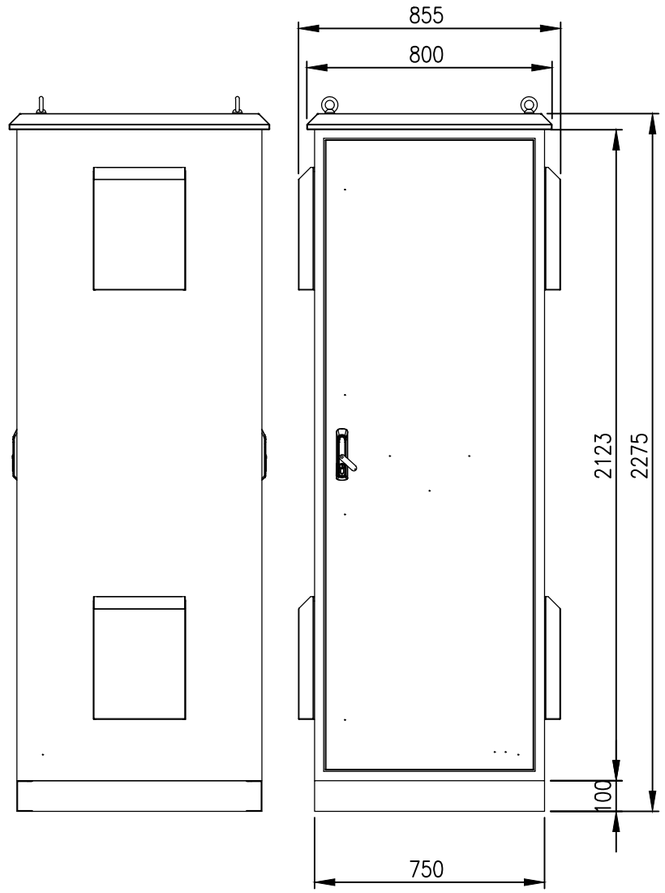

SIDE VIEW

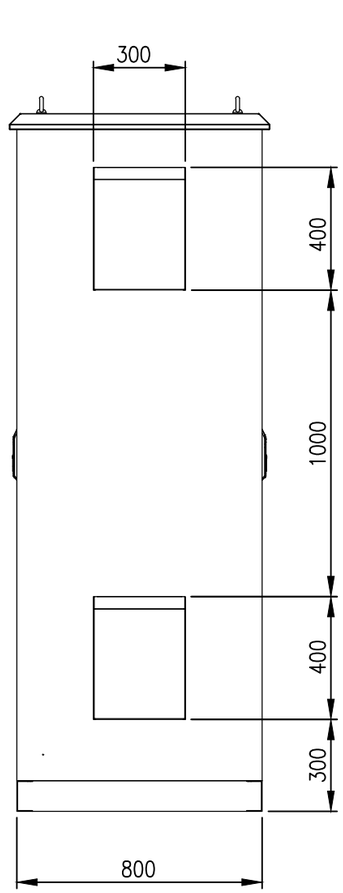

SIDE VIEW

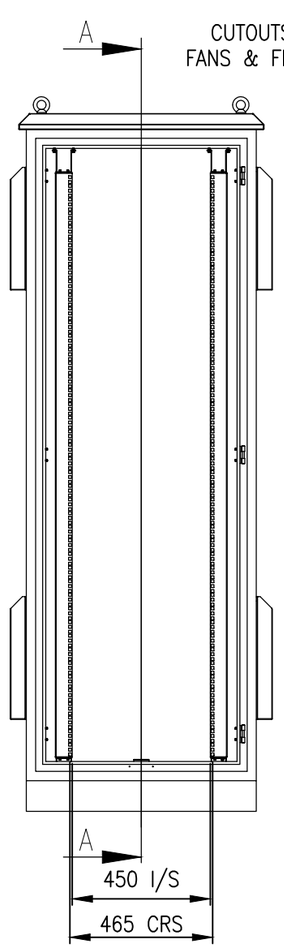

FRONT VIEW
(FRONT DOOR REMOVED)

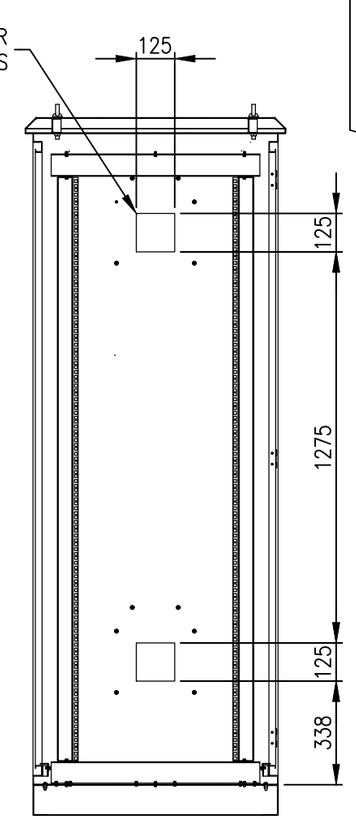

SECTION A-A

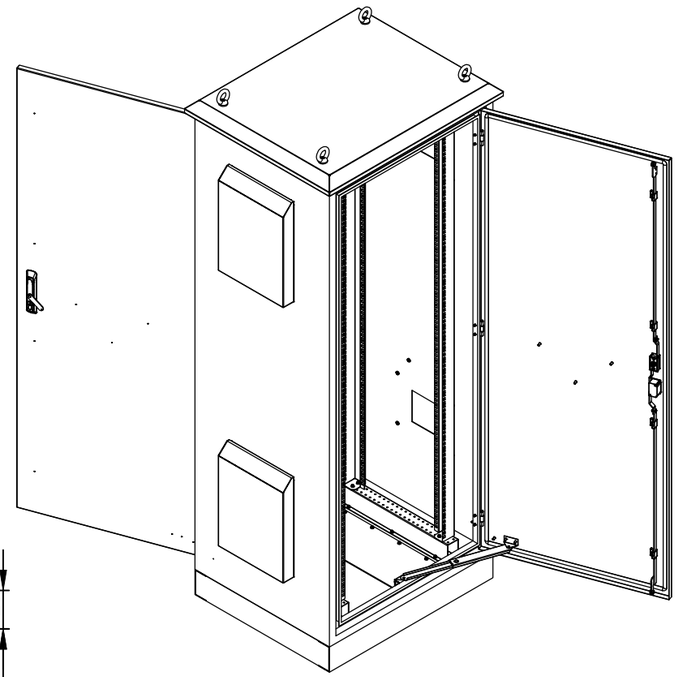

MATERIAL
BODY AND PLINTH: 2.5mm MARINE GRADE ALUMINIUM
DOORS: 2.5mm MARINE GRADE ALUMINIUM
19" DATA RAILS: 1.5mm 316 STAINLESS STEEL
GLAND PLATE: 3mm ALUMINIUM
SEAL: POLYURETHANE
SURFACE TREATMENT: POWDER-COAT 80-120micron
COLOUR: T33 SMOKE BLUE, SMOOTH FINISH

PROTECTION: IP55 (EXCLUDING FANS/FILTER CUTOUTS)
STANDARD: IEC62208, IEC/EN/AS60529, EIA-310D

© IP ENCLOSURES 2017.
THIS DRAWING SHALL NOT BE COPIED OR REPRODUCED
WITHOUT AUTHORISATION FROM IP ENCLOSURES.
www.ipenclosures.com.au

Itemref	Quantity	Title/Name, designation, material, dimension etc			Article No./Reference	
Designed by: IP		Checked by: IP	Approved by - date: 05/06/19	Filename: IP-A2277580-T33	Date: 05/06/19	Scale: 1:20
Enclosures		42RU CABINET ALUMINIUM 2275x750x800				
		IP-A2277580-T33			Edition: 2	Sheet: 1/1