RevNo	Revision note	Date	Signature	Checked
	GENERAL REVISION		IP	IP

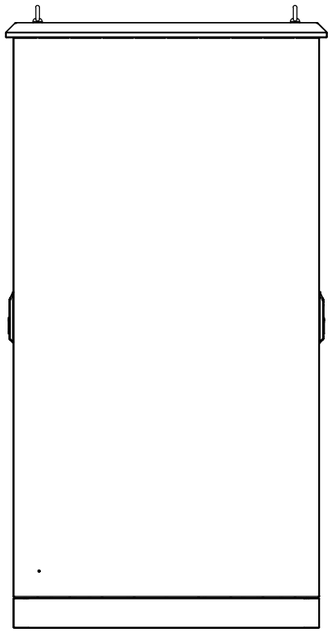

LEFT SIDE VIEW

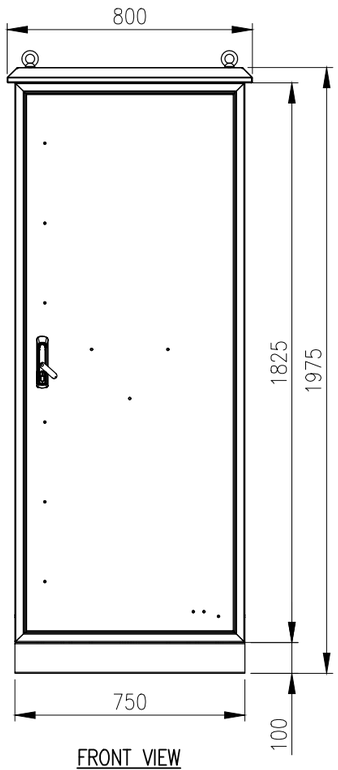

FRONT VIEW
(ASSEMBLY)

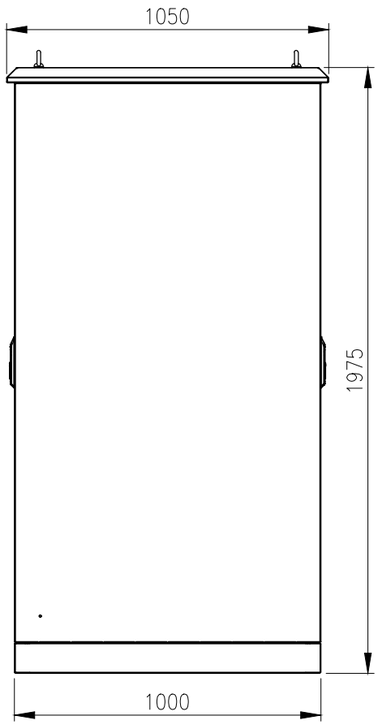

RIGHT SIDE VIEW

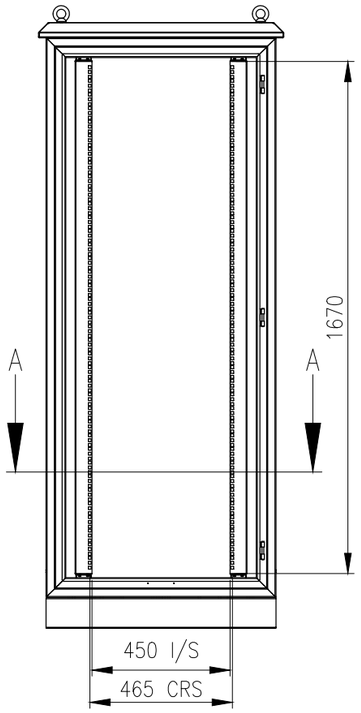

FRONT VIEW
(FRONT DOOR REMOVED)

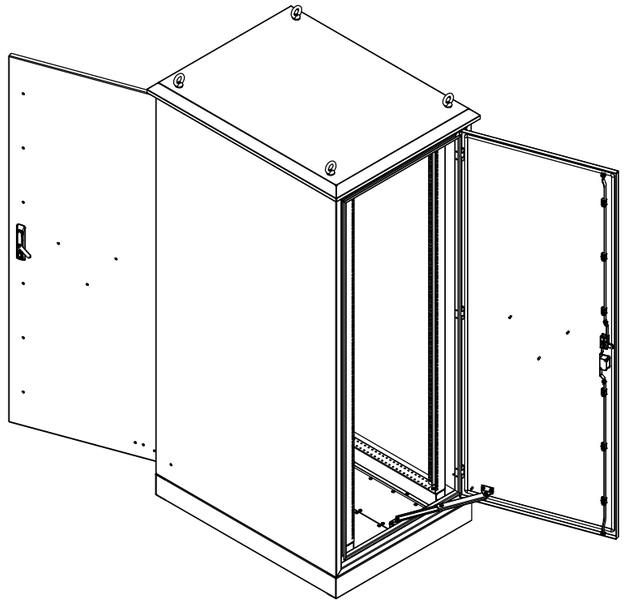

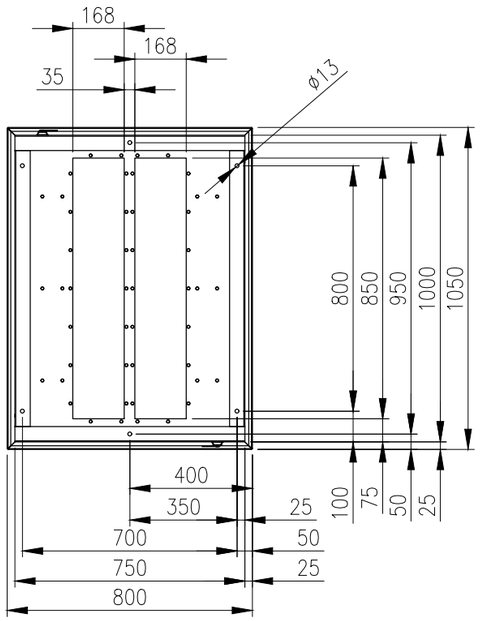

BOTTOM VIEW

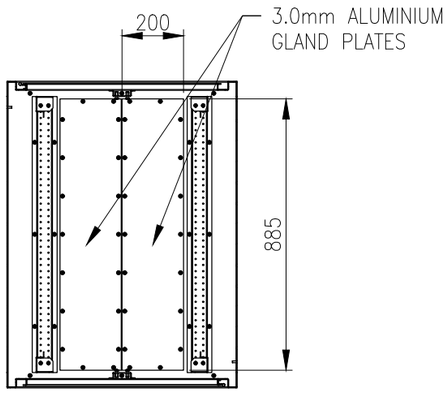

SECTION A–A

MATERIAL
BODY AND PLINTH: 2.5mm MARINE GRADE ALUMINIUM
DOORS: 2.5mm MARINE GRADE ALUMINIUM
19" DATA RAILS: 1.5mm GALVANISED STEEL SHEET
GLAND PLATE: 3.0mm ALUMINIUM
SEAL: POLYURETHANE
SURFACE TREATMENT: POWDER–COAT 80–120micron
COLOUR: WGN WILDERNESS GREEN, SMOOTH FINISH

PROTECTION: IP66 IK10
STANDARD: IEC/EN62208, IEC/EN/AS60529, EIA–310D

© IP ENCLOSURES 2025.
THIS DRAWING SHALL NOT BE COPIED OR REPRODUCED
WITHOUT AUTHORISATION FROM IP ENCLOSURES.
www.ipenclosures.com.au

Itemref	Quantity	Title/Name, designation, material, dimension etc		Article No./Reference	
Designed by IP		Checked by IP	Approved by - date 29/04/25	Filename IP–A19775100–0–WGN	Date 29/04/25	Scale 1:20

Enclosures

36RU ALUMINIUM 1975x750x1000 NO VENTS

IP–A19775100–0–WGN | Edition 0 | Sheet 1/1