RevNo	Revision note	Date	Signature	Checked
1	GENERAL REVISION	26/02/25	IP	IP

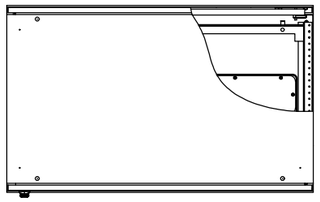

TOP VIEW

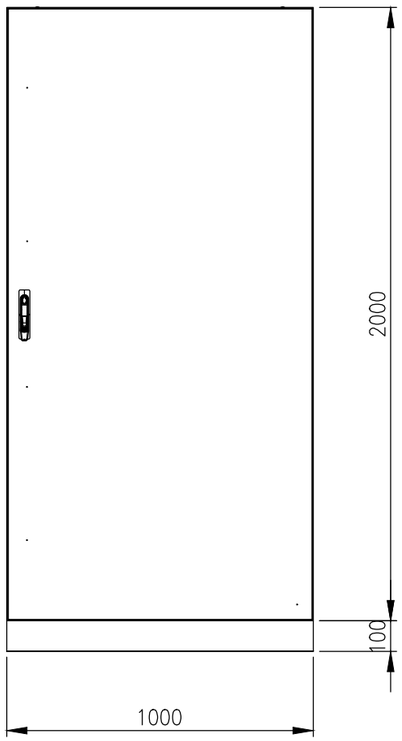

FRONT VIEW

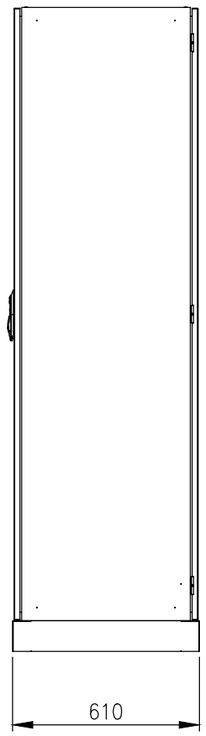

SIDE VIEW

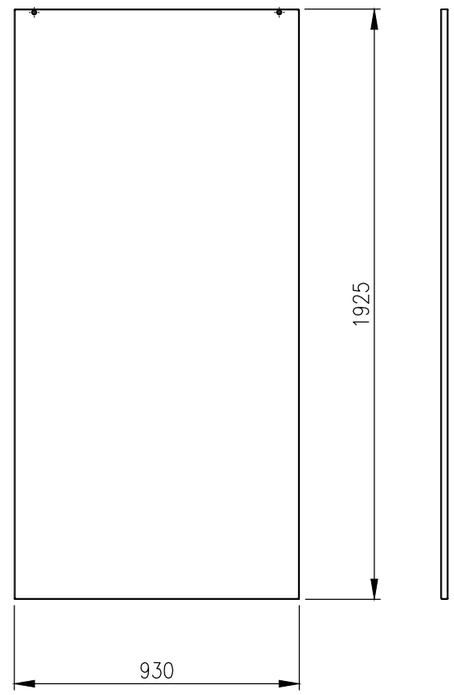

DEVICE MOUNTING PLATE

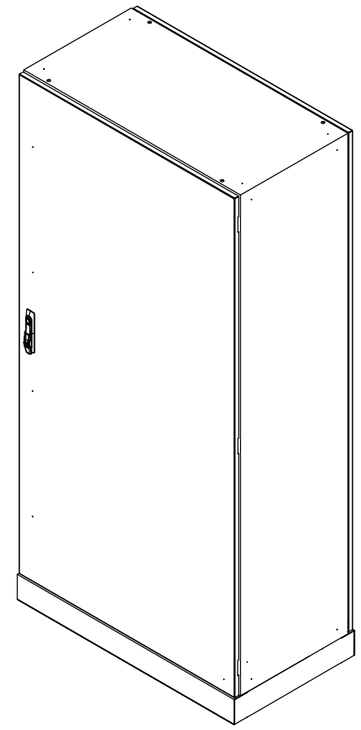

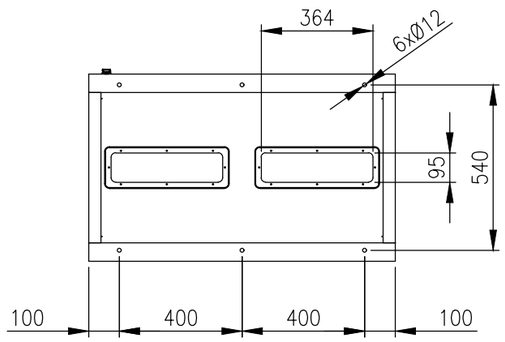

BOTTOM VIEW

MATERIAL
BODY: 1.5mm GALVANISED STEEL SHEET
DOOR: 1.5mm GALVANISED STEEL SHEET
DEVICE PLATE: 1.5mm GALVANISED STEEL SHEET
GLAND PLATE: 1.5mm GALVANISED STEEL SHEET
SEAL: POLYURETHANE
SURFACE TREATMENT: POWDER-COAT 80-120micron
COLOUR: RAL7035 LIGHT GREY

PROTECTION: IP66 IK10 (NEMA 4)
STANDARD: IEC/EN62208, IEC/EN/AS60529

© IP ENCLOSURES 2023.
THIS DRAWING SHALL NOT BE COPIED OR REPRODUCED
WITHOUT AUTHORISATION FROM IP ENCLOSURES.
www.ipenclosures.com.au

IMPORTANT NOTE:
WALL MOUNTING BRACKETS ARE NOT INCLUDED AND MUST BE ORDERED SEPARATELY.

Itemref	Quantity	Title/Name, designation, material, dimension etc	Article No./Reference

Designed by	Checked by	Approved by - date	Filename	Date	Scale
IP	IP	22/08/23	IP-20010060	22/08/23	1:20

Enclosures

2000 x 1000 x 600 STEEL ENCLOSURE

IP-20010060	Edition 1	Sheet 1/1