RevNo	Revision note	Date	Signature	Checked

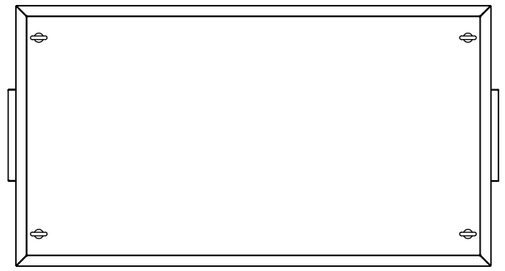

FRONT VIEW

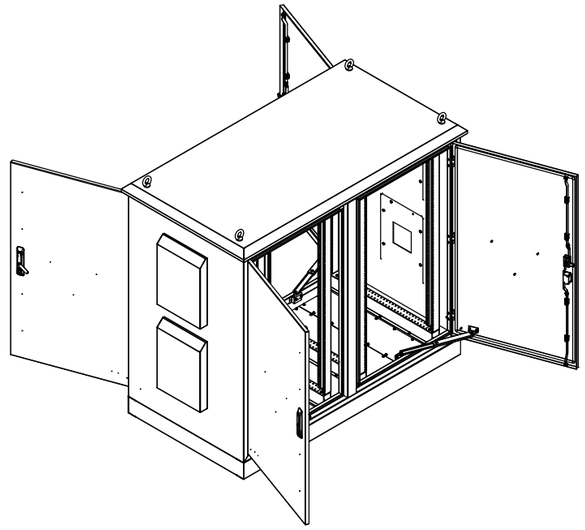

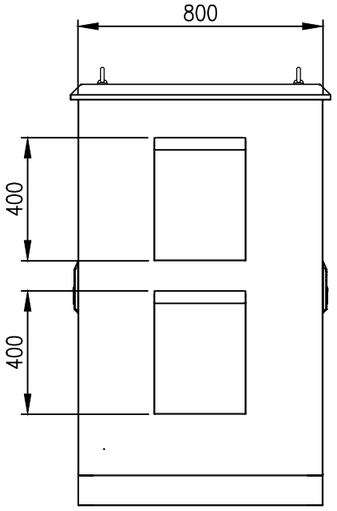

LEFT SIDE VIEW

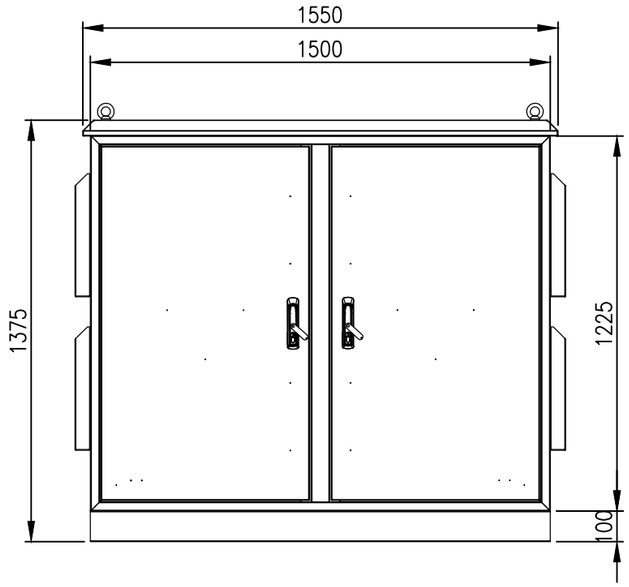

FRONT VIEW

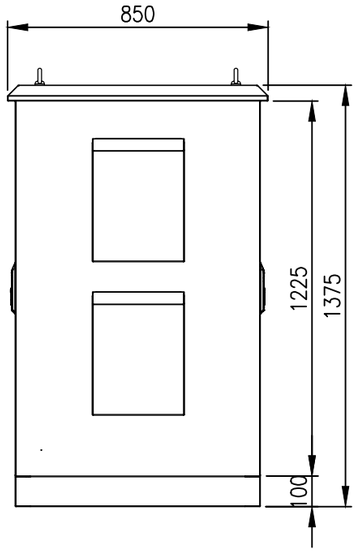

RIGHT SIDE VIEW

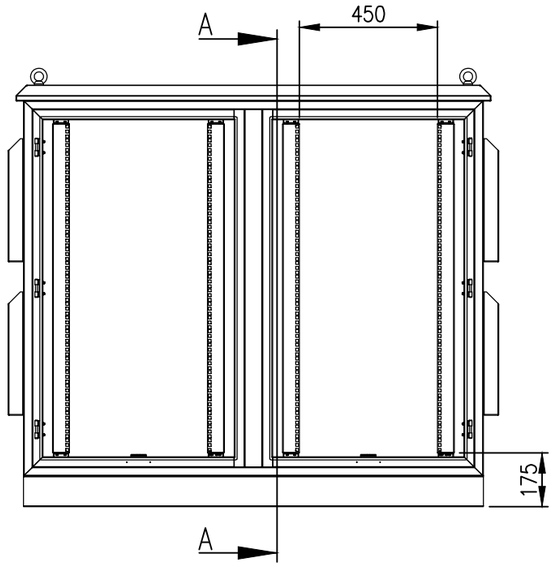

INTERIOR VIEW–DOOR REMOVED

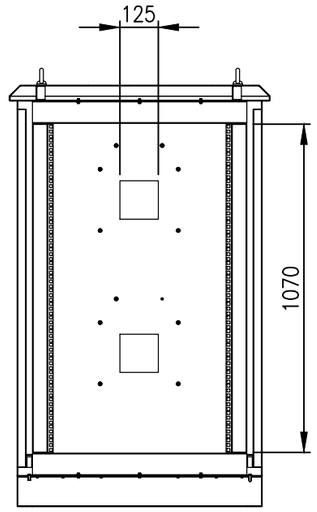

SECTION A–A

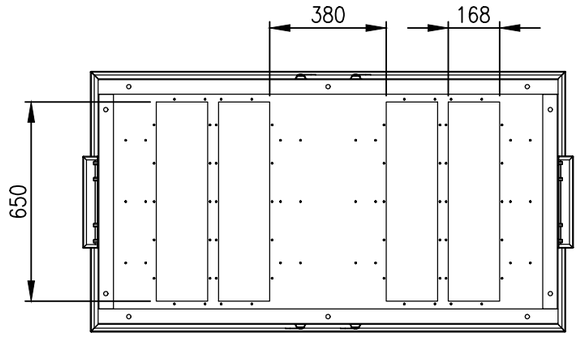

BOTTOM VIEW

MATERIAL
BODY AND PLINTH: 2.0mm GALVANISED STEEL SHEET
DOORS: 2.0mm GALVANISED STEEL SHEET
19" DATA RAILS: 1.5mm GALVANISED STEEL SHEET
GLAND PLATE: 3.0mm ALUMINIUM
SEAL: POLYURETHANE
SURFACE TREATMENT: POWDER–COAT 80–120micron
COLOUR: T33 SMOKE BLUE, SMOOTH FINISH

PROTECTION: IP55
STANDARD: IEC62208, IEC/EN/AS60529, EIA–310D

© IP ENCLOSURES 2023.
THIS DRAWING SHALL NOT BE COPIED OR REPRODUCED
WITHOUT AUTHORISATION FROM IP ENCLOSURES.
www.ipenclosures.com.au

Itemref	Quantity	Title/Name, designation, material, dimension etc			Article No./Reference	
Designed by IP		Checked by IP	Approved by - date 06/03/23	Filename IP–13715080–T33	Date 06/03/23	Scale 1:20
IP Enclosures		2 x 24RU (48RU) FIELD CABINET 1375Hx1500Wx800D DOUBLE BAY				
		IP–13715080–T33			Edition 0	Sheet 1/1