RevNo	Revision note	Date	Signature	Checked
3	GENERAL REVISION	26/02/25	IP	IP

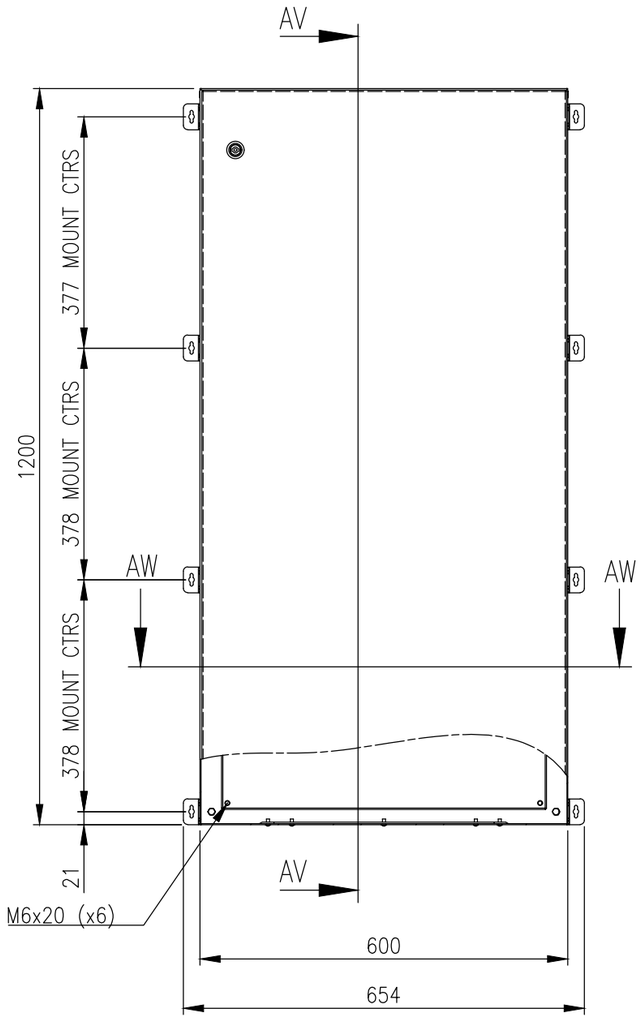

FRONT VIEW

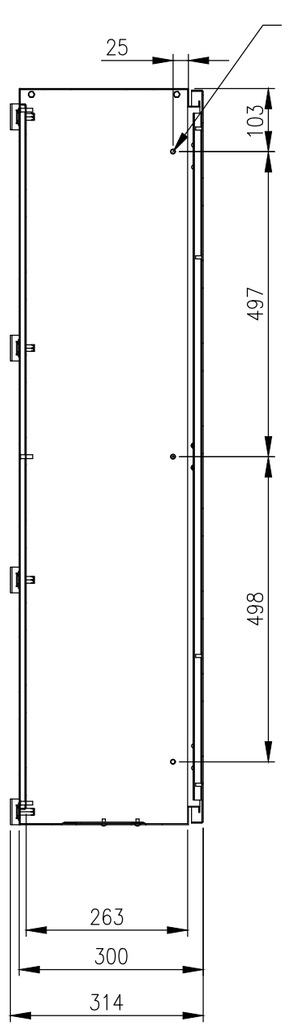

SECTION AV–AV

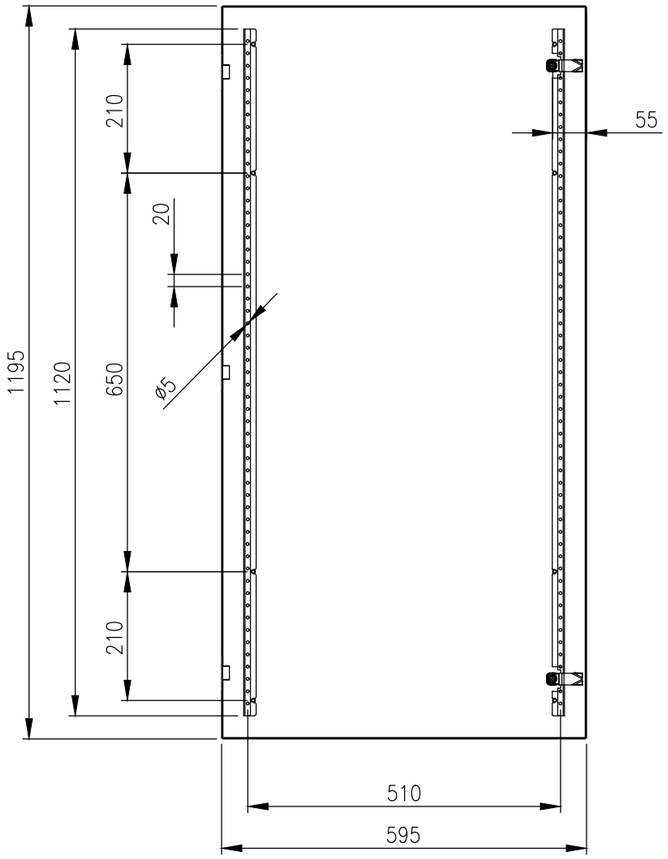

INSIDE DOOR VIEW

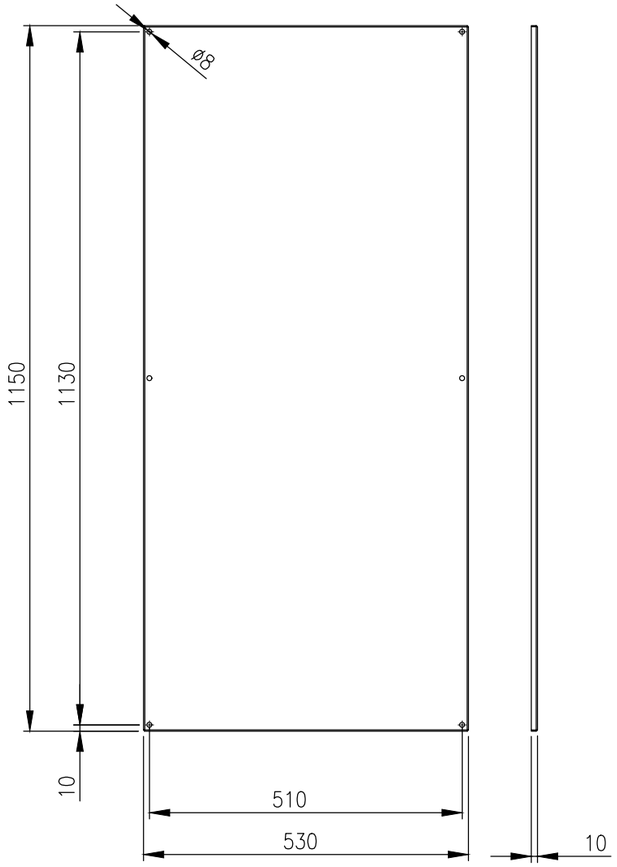

DEVICE MOUNTING PLATE

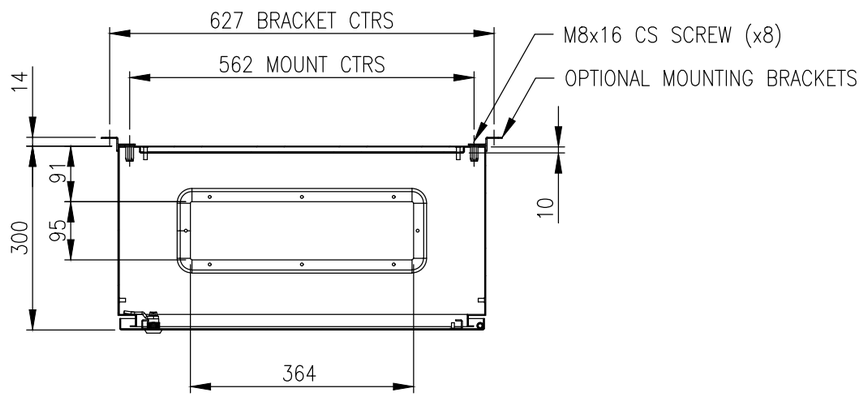

SECTION AW–AW

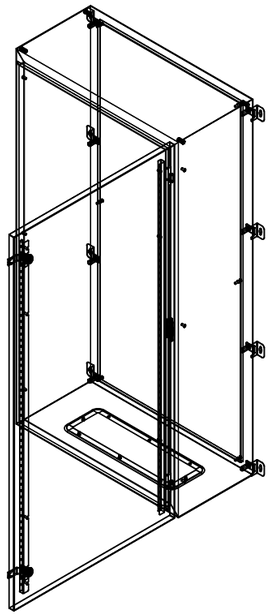

MATERIAL
BODY: 1.5mm GALVANISED STEEL SHEET
DOOR: 1.5mm GALVANISED STEEL SHEET
DEVICE PLATE: 1.5mm GALVANISED STEEL SHEET
GLAND PLATE: 1.5mm GALVANISED STEEL SHEET
SEAL: POLYURETHANE
SURFACE TREATMENT: POWDER–COAT 80–120micron
COLOUR: RAL7035 LIGHT GREY

MASS: 40.0Kg.

PROTECTION: IP66 IK10 (NEMA 4)
STANDARD: IEC/EN62208, IEC/EN/AS60529

© IP ENCLOSURES 2016.
THIS DRAWING SHALL NOT BE COPIED OR REPRODUCED
WITHOUT AUTHORISATION FROM IP ENCLOSURES.
www.ipenclosures.com.au

IMPORTANT NOTE:
WALL MOUNTING BRACKETS ARE NOT INCLUDED AND MUST BE ORDERED SEPARATELY.

Itemref	Quantity	Title/Name, designation, material, dimension etc			Article No./Reference	
Designed by IP		Checked by IP	Approved by - date 17/10/16	Filename IP–1206030	Date 17/10/16	Scale 1:10

Enclosures

1200x600x300 STEEL ENCLOSURE

IP–1206030 | Edition 3 | Sheet 1/1