IP55 19” Field Cabinet

IP-1077580-T33

STEEL | SINGLE BAY 19” RACK | IP55

19” 18RU - 1075H x 750W x 800D

IP Enclosures FC Range of IP55 19” Field Data Rack Cabinets are designed for heavy duty outdoor applications to house sensitive data network and electrical equipment in harsh environments. They are suitable for a variety of outdoor applications including road and rail transport management systems and general data and network infrastructure applications.

Protection: Complies with IP55 IK10, NEMA 4
(Excluding cutouts for fans/filters)

Standard: IEC62208, IEC/EN/AS60529, EIA-310-D CE UKCA

Rack Unit Size: 18RU

Material:
– Body and Plinth: 2.0mm galvanised steel sheet
– Doors: 2.0mm galvanised steel sheet
– 19” Data Rack Rails: 1.5mm galvanised steel sheet
– Gland Plate: 3.0mm aluminium
– Enclosure Seal: Polyurethane

Body: The robust monoblock body is fabricated using 2.0mm galvanised steel sheet. The body is fitted with rain hood/sunshield, plinth, vent hoods and 4 x lifting eye bolts. Flat face sealing surfaces are provided to increase seal life. A 3.0 mm galvanised steel split gland plate is also incorporated into the bottom face. Four cutouts 125mm x 125mm are provided to house fans and filters and each are covered with removable vent hoods.

Doors: Front and rear doors are fabricated using 2.0mm galvanised steel sheet and are designed to provide flush recessed mounting to prevent vandalism and unauthorised access. The doors incorporate concealed removable hinges with captive pins. They are designed for a 110° opening and are provided with heavy duty door stays.

19” Data Rack Rails: Front and rear 19″ data rack rails are fabricated from 1.5mm galvanised steel sheet.

Seal: A high quality full perimeter Polyurethane foamed in place (FIP) seal provides excellent sealing over a long life.

Locks: 3 point locking systems with key-lock swing handles.

Surface Treatment: UL approved epoxy polyester powder-coated with a textured finish. 80-120 micron average thickness. T33 Smoke Blue smooth finish.

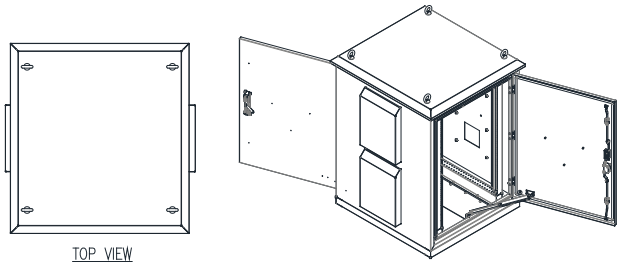

TOP VIEW

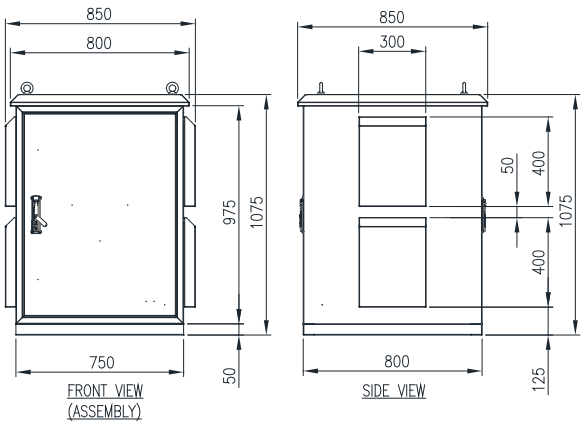

© IP Enclosures 2020