RevNo	Revision note	Date	Signature	Checked
2	GENERAL REVISION	9/7/19	IP	IP

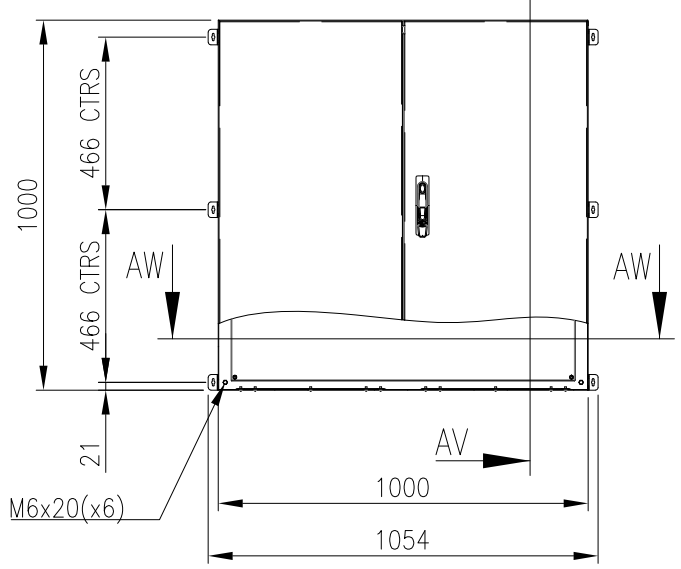

FRONT VIEW

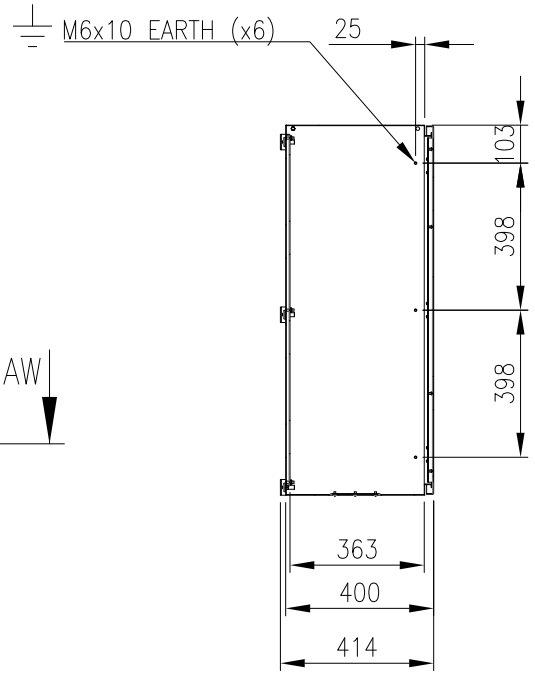

SECTION AV–AV

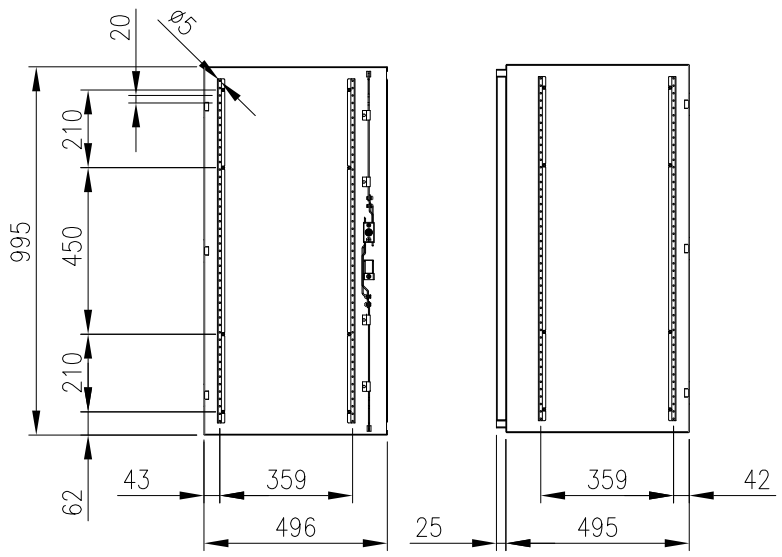

INSIDE DOOR VIEW

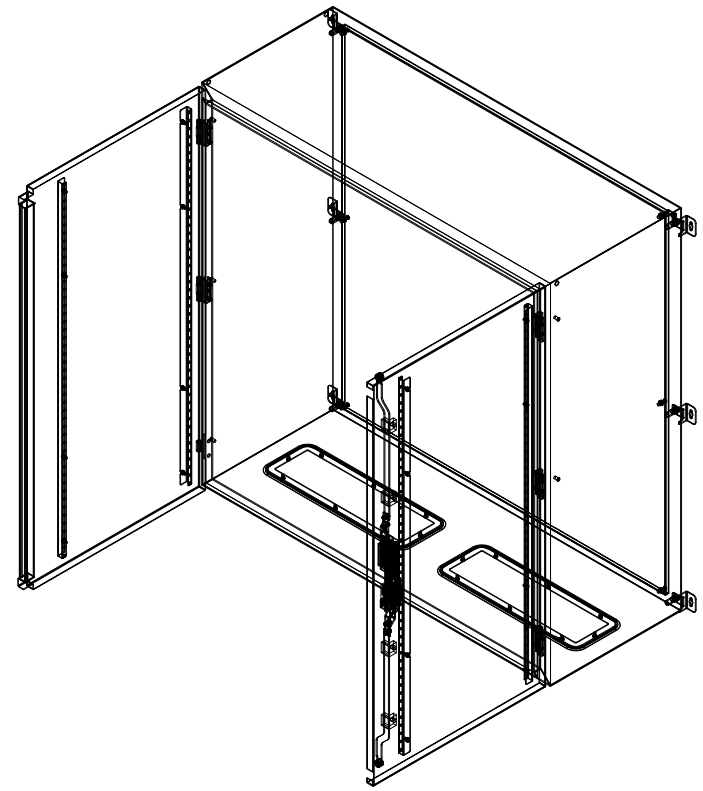

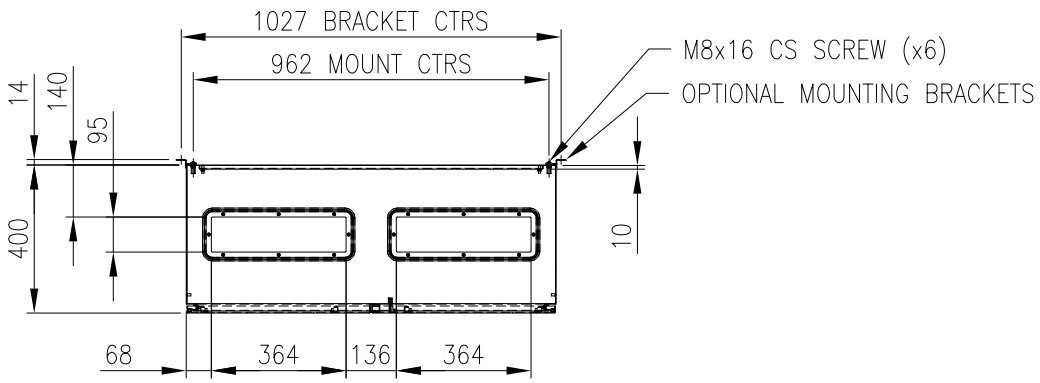

SECTION AW–AW

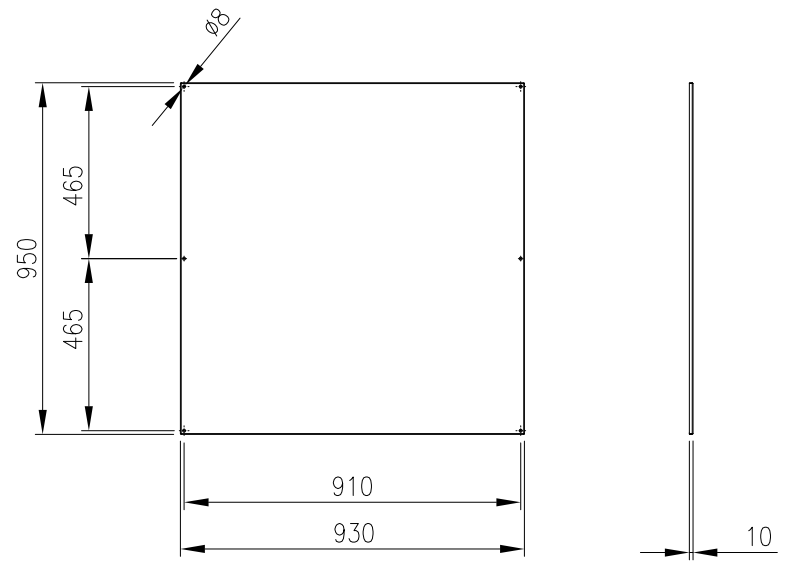

DEVICE MOUNTING PLATE

MATERIAL
BODY: 1.5mm GALVANISED STEEL SHEET
DOOR: 1.5mm GALVANISED STEEL SHEET
DEVICE PLATE: 1.5mm GALVANISED STEEL SHEET
SEAL: POLYURETHANE
SURFACE TREATMENT: POWDER–COAT 80–120micron

MASS: 56.0kg

PROTECTION: IP55 IK10, NEMA4
STANDARD: IEC62208, IEC/EN/AS60529

© IP ENCLOSURES 2016.
THIS DRAWING SHALL NOT BE COPIED OR REPRODUCED
WITHOUT AUTHORISATION FROM IP ENCLOSURES.
www.ipenclosures.com.au

Itemref	Quantity	Title/Name, designation, material, dimension etc			Article No./Reference	
Designed by IP		Checked by IP	Approved by - date 17/10/16	Filename IP–10010040–01	Date 17/10/16	Scale 1:20
IP Enclosures		1000x1000x400 STEEL ENCLOSURE				
		IP–10010040–01			Edition 2	Sheet 1/1